Data sheet for three-phase Squirrel-Cage-Motors SIMOTICS

Motor type : 1CV3222D **SIMOTICS SD - 225 M - IM B3 - 8p**

Client order no.	Item-No.	Offer no.
Order no.	Consignment no.	Project

Remarks

Electrical data

Safe Area

U [V]	Δ / Y	f [Hz]	P [kW]	P [hp]	I [A]	n [1/min]	M [Nm]	η 3) 4/4	η 3) 3/4	η 3) 2/4	cosφ 3) 4/4	cosφ 3) 3/4	cosφ 3) 2/4	I_A/I_N I_l/I_N	M_A/M_N T_l/T_N	M_K/M_N T_B/T_N	IE-CL
230	Δ	50	22.00	-/-	79.00	732	285.0	90.6	91.4	91.2	0.77	0.71	0.59	5.9	2.6	2.9	IE3
400	Y	50	22.00	-/-	45.50	732	285.0	90.6	91.4	91.2	0.77	0.71	0.59	5.9	2.6	2.9	IE3

IM B3 / IM 1001		FS 225 M		IP55		IEC/EN 60034	IEC, DIN, ISO, VDE, EN				

Environmental conditions : -20 °C - +40 °C / 1000 m

Locked rotor time (hot / cold) : 21.9 s | 32.5 s

Mechanical data

Sound level (SPL / SWL) at 50Hz|60Hz	56 / 70 dB(A) 2)	60 / 74 dB(A) 2)	External earthing terminal	Yes (standard)
Moment of inertia	0.5500 kg m²		Vibration severity grade	A
Bearing DE | NDE	6313 C3	6313 C3	Insulation	155(F) to 130(B)
bearing lifetime			Duty type	S1
L_{10mh} $F_{Rad\ min}$ for coupling operation 50|60Hz 1)	40000 h	32000 h	Direction of rotation	bidirectional
Relubrication interval/quantity DE | NDE	20 g | 20 g 8000 h		Frame material	cast iron
Lubricants	Unirex N3		Net weight of the motor (IM B3)	280 kg
Regreasing device	Yes (standard)		Coating (paint finish)	Special paint finish C3
Grease nipple	M10x1 DIN 3404 A		Color, paint shade	RAL7030
Type of bearing	Locating bearing NDE		Motor protection	(B) 3 PTC thermistors - for tripping (standard) (2 terminals)
Condensate drainage holes	Yes (standard)		Method of cooling	IC411 - self ventilated, surface cooled

Terminal box

Terminal box position	top	Max. cross-sectional area	35 mm²
Material of terminal box	cast iron	Cable diameter from ... to ...	27 mm - 35 mm
Type of terminal box	TB1 L01	Cable entry	2xM50x1,5-2xM20x1,5
Contact screw thread	M8	Cable gland	4 plugs

Notes:

I_A/I_N = locked rotor current / current nominal
M_A/M_N = locked rotor torque / torque nominal
M_K/M_N = break down torque / nominal torque

1) L10mh according to DIN ISO 281 10/2010
2) at rated power / at full load
3) Value is valid only for DOL operation with motor design IC411

responsible dep.	technical reference	created by	approved by	
DI MC LVM		DT Configurator		*Technical data are subject to change! There may be discrepancies between calculated and rating plate values.*

SIEMENS	document type: datasheet		document status: released		customer
	title: **1LE1603-2BD22-2AB4**		document number		
		rev. 01	creation date 2021-11-03 11:05	language en	Page 1/1

© Siemens AG 2021

Transmittal, reproduction, dissemination and/or editing of this document as well as utilization of its contents and communication thereof to others without express authorization are prohibited. Offenders will be held liable for the payment of damages. All rights created by patent grant or registration of a utility model or design patent are reserved.

Weitergabe sowie Vervielfältigung, Verbreitung und/oder Bearbeitung dieses Dokumentes, Verwertung und Mitteilung seines Inhaltes sind verboten, soweit nicht ausdrücklich gestattet. Zuwiderhandlungen verpflichten zu Schadensersatz. Alle Rechte vorbehalten für den Fall der Patenterteilung, Gebrauchsmuster- oder Geschmacksmustereintragung vorbehalten

Confidential tire de secret d'entreprise. Tous droits réservés.
Comunicado como secreto empresarial. Reservados todos os direitos.
[redacted]
Confiado como secreto de empresa. Nos reservamos todos los derechos.

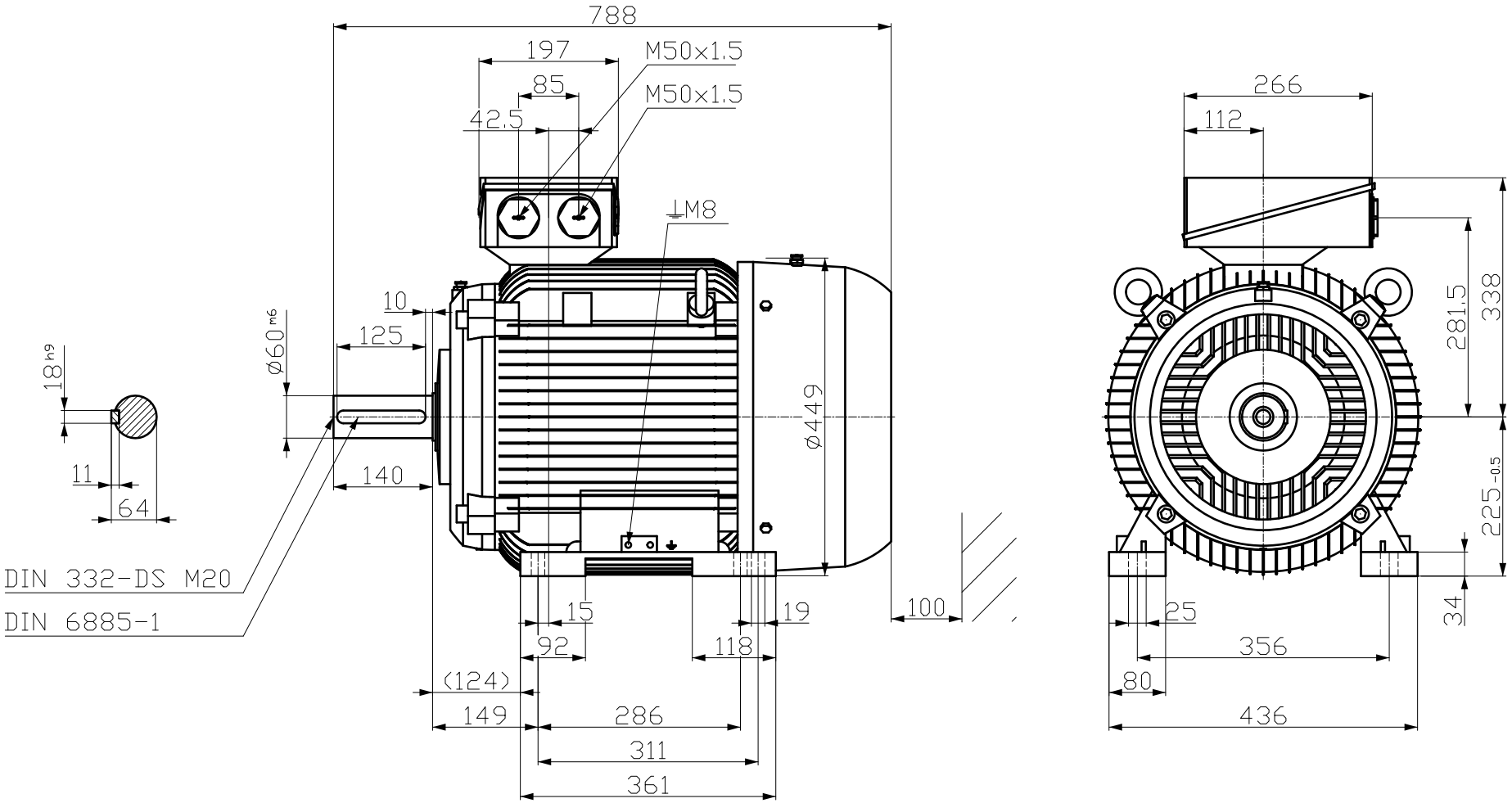

Tolerance	Surface	Material	Weight -	Scale mm
1LE1603-2BD22-2AB4 -	Author Creator DTK Approval Department	Dimensional drawing MaÇzeichnung		
	Change Order	MLFB		Doc Type
SIEMENS	Doc State 11/3/21	Item No		Paper Size A3
	Revision Index RS	Doc No		1st Language en 2nd Language de
© Siemens AG 2018	Project No -	Ref No -		Sheet 1 of 1