SIEMENS

Data sheet for three-phase Squirrel-Cage-Motors

MLFB-Ordering data: **1LE1003-1EC63-4AA4**

Motor type: **1AV3186C**

Client order no.:
Order no.:
Offer no.:
Remarks:

Item no.:
Consignment no.:
Project:

U [V]	Δ / Y	f [Hz]	P [kW]	P [hp]	I [A]	n [1/min]	M [Nm]	NOM. EFF at ... load [%] 4/4	3/4	2/4	Power factor at ... load 4/4	3/4	2/4	I_A/I_N I_l/I_N	M_A/M_N T_l/T_N	M_K/M_N T_B/T_N	IE-CL
400	Δ	50	18.50	- / -	38.00	975	181.0	91.7	92.3	91.9	0.77	0.71	0.59	6.9	2.6	3.3	IE3
690	Y	50	18.50	- / -	22.00	975	181.0	91.7	92.3	91.9	0.77	0.71	0.59	6.9	2.6	3.3	IE3
460	Δ	60	22.00	- / -	37.50	1175	179.0	93.0	93.6	93.5	0.79	0.73	0.62	6.9	2.4	3.1	IE3
460	Δ	60	18.50	- / -	33.50	1180	150.0	93.0	93.2	92.6	0.75	0.68	0.56	7.9	2.9	3.7	IE3
IM B3 / IM 1001			FS 180 L		150 kg	IP55		IEC/EN 60034		IEC, DIN, ISO, VDE, EN							

Mechanical data

Sound pressure level 50Hz/60Hz (load)	67 dB(A) 1)	68 dB(A) 1)
Moment of inertia	0.247 kg m²	
Bearing DE | NDE	6210 Z C3	6210 Z C3
Bearing lifetime	40000 h	
Lubricants	Unirex N3	
Regreasing device	No	
Grease nipple	- / -	
Type of bearing	Locating bearing NDE	
Condensate drainage holes	No	
External earthing terminal		
Vibration severity grade	A	
Insulation	155(F) to 130(B)	
Duty type	S1	
Direction of rotation	bidirectional	
Frame material	aluminum	
Data of anti condensation heating	-/-	
Coating (paint finish)	Standard paint finish C2	
Color, paint shade	RAL7030	
Motor protection	(A) without (Standard)	
Method of cooling	IC411 - self ventilated, surface cooled	

Environmental conditions

Ambient temperature	-20 °C - +40 °C
Altitude above sea level	1000 m

Terminal box

Terminal box position	top
Material of terminal box	Aluminium
Type of terminal box	TB1 J00
Contact screw thread	M5
Max. cross-sectional area	16.0 mm²
Cable diameter from ... to ...	19.0 mm - 28.0 mm
Cable entry	2xM40x1,5
Cable gland	2 plugs

Special design (0)

Notes

I_A/I_N = locked rotor current / current nominal
M_A/M_N = locked rotor torque / torque nominal
M_K/M_N = break down torque / nominal torque
1) Value is valid only for DOL operation with motor design IC411

Technical data are subject to change! There may be discrepancies between calculated and rating plate values.

Transmittal, reproduction, dissemination and/or editing of this document as well as utilization of its contents and communication thereof to others without express authorization are prohibited. Offenders will be held liable for payment of damages. All rights created by patent grant or registration of a utility model or design patent are reserved.

Weitergabe sowie Vervielfältigung, Verbreitung und/oder Bearbeitung dieses Dokumentes, Verwertung und Mitteilung seines Inhaltes sind verboten, soweit nicht ausdrücklich gestattet. Zuwiderhandlungen verpflichten zu Schadensersatz. Alle Rechte vorbehalten für den Fall der Patenterteilung, Gebrauchsmuster- oder Geschmacksmustereintragung vorbehalten

Confidential: Tous droits réservés.
Comunicado como secreto empresarial. Reservados todos os direitos.
[redacted]
Confiado como secreto de empresa. Nos reservamos todos los derechos.

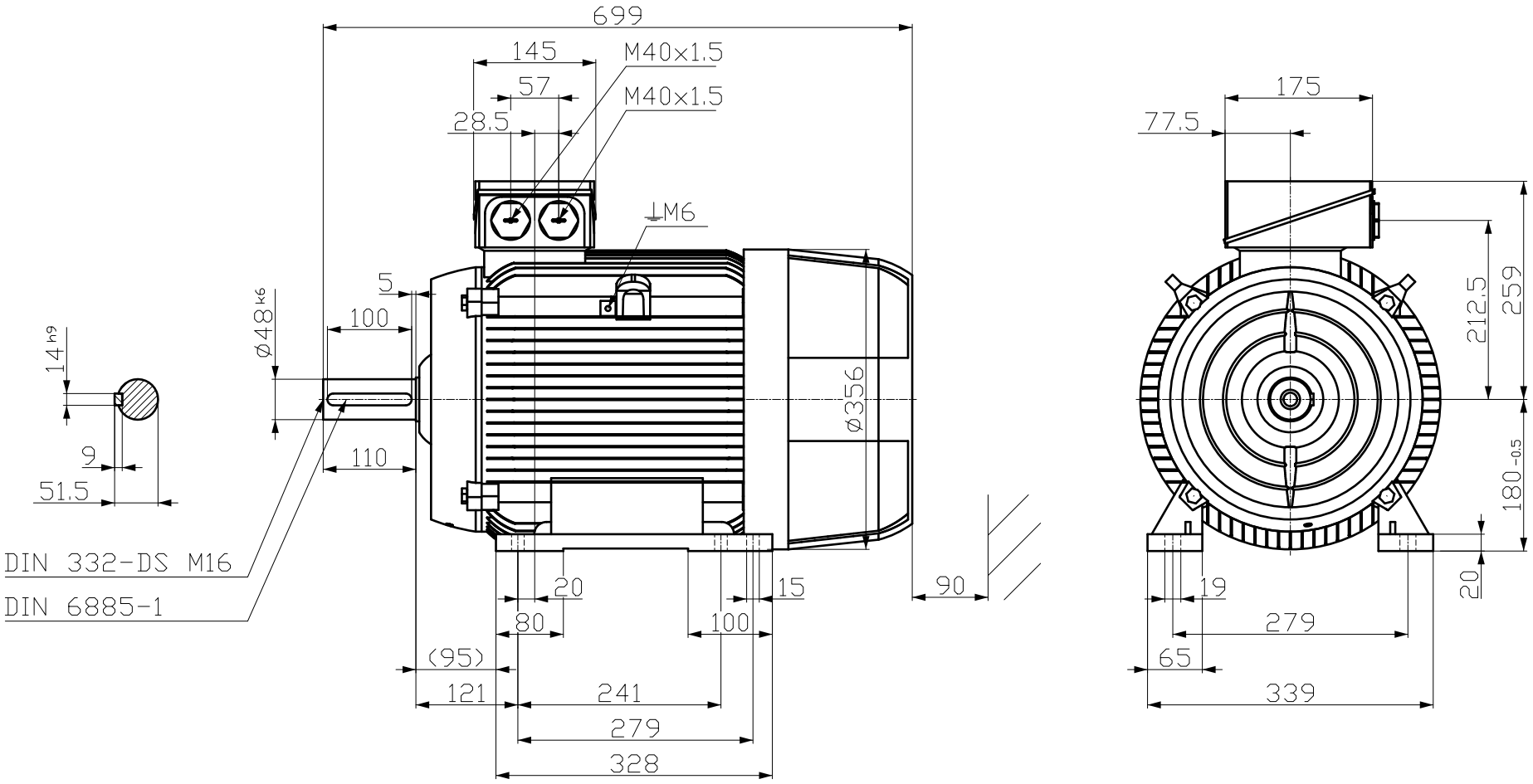

Tolerance	Surface	Material	Weight	Scale
			-	mm

1LE1003-1EC63-4AA4 -	Author	Dimensional drawing MaÇzeichnung	
	Creator DTK		
	Approval		
	Department		
	Change Order	MLFB	Doc Type
SIEMENS	Doc State 12/07/19	Item No	Paper Size A3
	Revision Index RS	Doc No	1st Language en 2nd Language de
© Siemens AG 2018	Project No -	Ref No -	Sheet 1 of 1