SIEMENS

Data sheet for three-phase Squirrel-Cage-Motors

MLFB-Ordering data: **1LE1603-1DB42-2JB4**

Motor type: **1CV3164B**

Client order no.: Item no.:
Order no.: Consignment no.:
Offer no.: Project:
Remarks:

U [V]	Δ / Y	f [Hz]	P [kW]	P [hp]	I [A]	n [1/min]	M [Nm]	NOM. EFF at ... load [%] 4/4	3/4	2/4	Power factor at ... load 4/4	3/4	2/4	I_A/I_N I_I/I_N	M_A/M_N T_I/T_N	M_K/M_N T_B/T_N	IE-CL
230	Δ	50	15.00	- / -	50.00	1475	97.0	92.1	92.3	91.5	0.82	0.76	0.65	8.5	2.5	3.8	IE3
400	Y	50	15.00	- / -	28.50	1475	97.0	92.1	92.3	91.5	0.82	0.76	0.65	8.5	2.5	3.8	IE3
460	Y	60	17.30	- / -	28.00	1775	93.0	93.6	93.7	92.9	0.83	0.78	0.68	8.5	2.5	3.7	IE3
460	Y	60	15.00	- / -	25.00	1780	80.0	93.0	92.8	91.4	0.81	0.75	0.64	9.5	2.9	4.3	IE3
IM B35 / IM 2001		FS 160 L			127 kg	IP55	CC032A	IEC/EN 60034			IEC, DIN, ISO, VDE, EN						

Mechanical data

Sound pressure level 50Hz/60Hz (load)	65 dB(A)	69 dB(A)
Moment of inertia	0.085 kg m²	
Bearing DE | NDE	6309 Z C3	6309 Z C3
Relubrication interval/quantity	10 g | 10 g 8000 h	
Lubricants	Esso Unirex N3	
Regreasing device	Yes (standard)	
Grease nipple		
Type of bearing	Locating bearing NDE	
Condensate drainage holes	Yes (standard)	
External earthing terminal	No	
Vibration class	A	
Insulation	155(F) to 130(B)	
Duty type	S1	
Direction of rotation	bidirectional	
Frame material	cast iron	
Data of anti condensation heating	-/-	
Coating	Special paint finish C3	
Color	RAL7030	
Motor protection	(B) 3 PTC thermistors - for tripping (standard) (2 terminals)	
Method of cooling	IC411 - self ventilated, surface cooled	

Environmental conditions

Ambient temperature	-20 °C - +40 °C
Altitude above sea level	1000 m

Terminal box

Terminal box position	top
Material of terminal box	cast iron
Type of terminal box	TB1 J01
Contact screw thread	M5
Max. cross-sectional area	16.0 mm²
Cable diameter from ... to ...	19.0 mm - 28.0 mm
Cable entry	2xM40x1,5-1xM16x1,5
Cable gland	3 plugs

Special design (0)

Technical data are subject to change! There may be discrepancies between calculated and rating plate values.

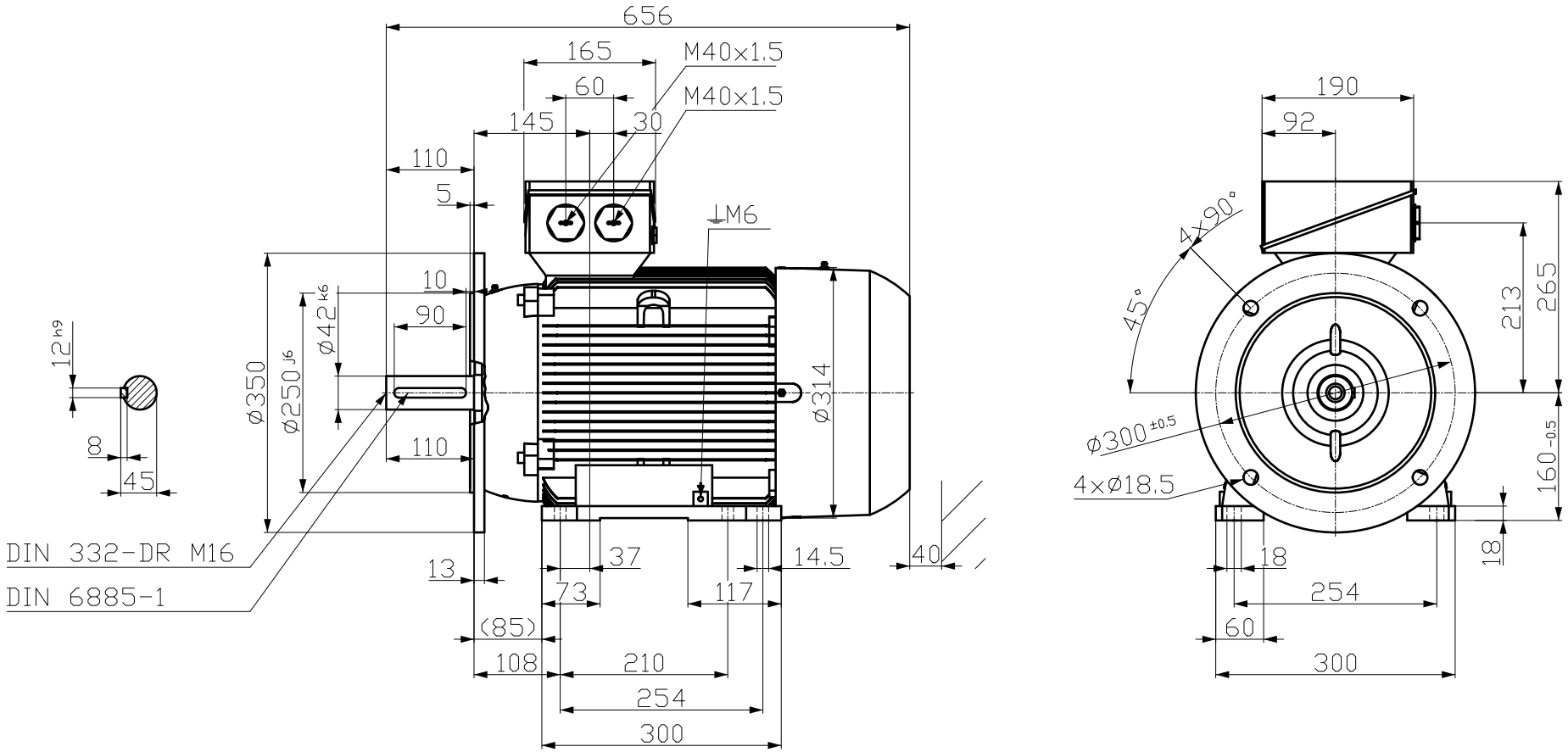

Tolerance	Surface	Material	Weight	Scale
			-	mm

1LE1603-1DB42-2JB4 -	Author	Dimensional drawing MaÇzeichnung	
	Creator DTK		
	Approval		
	Department		
	Change Order	MLFB	Doc Type /
SIEMENS	Doc State 18.08.17	Item No	Paper Size A3
	Revision Index RS	Doc No	1st Language en 2nd Language de
© Siemens AG 2016	Project No -	Ref No -	Sheet 1 of 1

Transmittal, reproduction, dissemination and/or editing of this document as well as utilization of its contents and communication thereof to others without express authorization are prohibited. Offenders will be held liable for payment of damages. All rights created by patent grant or registration of a utility model or design patent are reserved.

Weitergabe sowie Vervielfältigung, Verbreitung und/oder Bearbeitung dieses Dokumentes, Verwertung und Mitteilung seines Inhaltes sind verboten, soweit nicht ausdrücklich gestattet. Zuwiderhandlungen verpflichten zu Schadenersatz. Alle Rechte für den Fall der Patenterteilung, Gebrauchsmuster- oder Geschmacksmustereintragung vorbehalten

Confidentiel: Tous droits réservés.
Comunicado como secreto empresarial. Reservados todos os direitos.
Confiado como secreto de empresa. Nos reservamos todos los derechos.