Data sheet for three-phase Squirrel-Cage-Motors SIMOTICS

Motor type : 1AV2062B **SIMOTICS GP - 63 M - IM B3 - 4p**

Client order no.	Item-No.	Offer no.
Order no.	Consignment no.	Project
Remarks		

Electrical data

Safe Area

U [V]	Δ / Y	f [Hz]	P [kW]	P [hp]	I [A]	n [1/min]	M [Nm]	η 3) 4/4	η 3) 3/4	η 3) 2/4	cosφ 3) 4/4	cosφ 3) 3/4	cosφ 3) 2/4	I_A/I_N I_I/I_N	M_A/M_N T_I/T_N	M_K/M_N T_B/T_N	IE-CL
230	Δ	50	0.12	-/-	0.77	1390	0.8	59.1	56.4	49.0	0.66	0.57	0.45	3.1	2.4	2.5	IE2
400	Y	50	0.12	-/-	0.44	1390	0.8	59.1	56.4	49.0	0.66	0.57	0.45	3.1	2.4	2.5	IE2
460	Y	60	0.14	-/-	0.42	1685	0.8	64.0	61.4	54.8	0.66	0.57	0.46	3.5	2.4	2.7	IE2
460	Y	60	0.12	-/-	0.39	1710	0.7	64.0	60.3	52.2	0.60	0.52	0.41	3.7	2.9	3.2	IE2

IM B3 / IM 1001		FS 63 M	kg	IP55		IEC/EN 60034	IEC, DIN, ISO, VDE, EN			

Environmental conditions : -20 °C - +40 °C / 1000 m

Locked rotor time (hot / cold) : 40.4 s | 53.7 s

Mechanical data

Sound level (SPL / SWL) at 50Hz|60Hz	/ dB(A) 2)	/ dB(A) 2)
Moment of inertia	0.0004 kg m²	
Bearing DE | NDE	6201 2Z C3	6201 2Z C3
bearing lifetime		
L_{10mh} $F_{Rad\ min}$ for coupling operation 50|60Hz 1)	40000 h	32000 h
Lubricants	Unirex N3	
Regreasing device	No	
Grease nipple	-/-	
Type of bearing	Preloaded bearing DE	
Condensate drainage holes	Yes	
External earthing terminal	No	

Vibration severity grade	A
Insulation	155(F) to 130(B)
Duty type	S1
Direction of rotation	bidirectional
Frame material	aluminum
Net weight of the motor (IM B3)	kg
Coating (paint finish)	Standard paint finish C2
Color, paint shade	RAL7030
Motor protection	(A) without (Standard)
Method of cooling	IC411 - self ventilated, surface cooled

Terminal box

Terminal box position	top
Material of terminal box	Aluminium
Type of terminal box	TB1 B00
Contact screw thread	M4

Max. cross-sectional area	1.5 mm²
Cable diameter from ... to ...	9 mm - 17 mm
Cable entry	1xM25x1,5
Cable gland	1 plug

Notes:

I_A/I_N = locked rotor current / current nominal
M_A/M_N = locked rotor torque / torque nominal
M_K/M_N = break down torque / nominal torque

1) L10mh according to DIN ISO 281 10/2010
2) at rated power / at full load
3) Value is valid only for DOL operation with motor design IC411

responsible dep.	technical reference	created by	approved by	
DI MC LVM		DT Configurator		*Technical data are subject to change! There may be discrepancies between calculated and rating plate values.*

SIEMENS	document type	document status	customer
	datasheet	released	
	title	document number	
	1LE1001-0BB22-2AA4-Z		
	H03		

rev.	creation date	language	Page
01	2021-09-01 15:26	en	1/2

© Siemens AG 2021

Data sheet for three-phase Squirrel-Cage-Motors SIMOTICS

Motor type : 1AV2062B **SIMOTICS GP - 63 M - IM B3 - 4p**

Special design

H03	Condensation drain holes in end shield

Notes:

responsible dep.	technical reference	created by	approved by	
DI MC LVM		DT Configurator		*Technical data are subject to change! There may be discrepancies between calculated and rating plate values.*

SIEMENS	document type: datasheet		document status: released		customer
	title: 1LE1001-0BB22-2AA4-Z		document number		
	H03		rev. 01	creation date 2021-09-01 15:26	language en / Page 2/2

© Siemens AG 2021

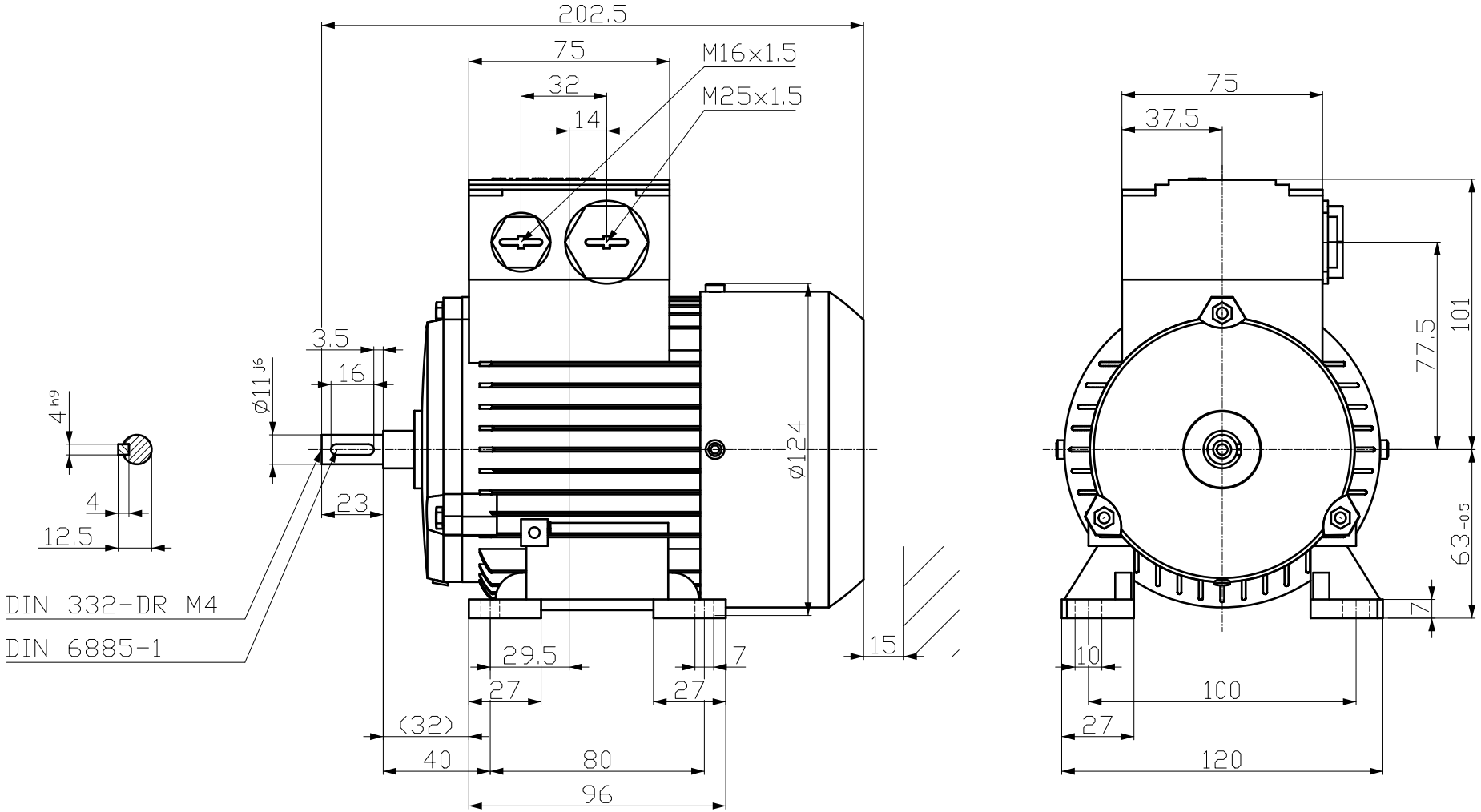

Tolerance	Surface	Material	Weight	Scale
			-	mm

1LE1001-0BB22-2AA4-Z H03	Author	Dimensional drawing MaÇzeichnung	
	Creator DTK		
	Approval		
	Department		
	Change Order	MLFB	Doc Type /
SIEMENS	Doc State 9/1/21	Item No	Paper Size A3
	Revision Index RS	Doc No	1st Language en 2nd Language de
© Siemens AG 2018	Project No -	Ref No -	Sheet 1 of 1

Transmittal, reproduction, dissemination and/or editing of this document as well as utilization of its contents and communication thereof to others without express authorization are prohibited. Offenders will be held liable for payment of damages. All rights created by patent grant or registration of a utility model or design patent are reserved.

Weitergabe sowie Vervielfältigung, Verbreitung und/oder Bearbeitung dieses Dokumentes, Verwertung und Mitteilung seines Inhaltes sind verboten, soweit nicht ausdrücklich gestattet. Zuwiderhandlungen verpflichten zu Schadenersatz. Alle Rechte für den Fall der Patenterteilung, Gebrauchsmuster- oder Geschmacksmustereintragung vorbehalten

Confidentiel: Tous droits réservés. Comunicado como secreto empresarial. Reservados todos os direitos. Confiado como secreto de empresa. Nos reservamos todos los derechos.