SIEMENS

Data sheet for three-phase Squirrel-Cage-Motors

MLFB-Ordering data: **1LE1503-1CA12-2JA4-Z**
F74

Motor type: **1CV3131A**
Client order no.:
Order no.:
Offer no.:
Remarks:

Item no.:
Consignment no.:
Project:

U [V]	Δ / Y	f [Hz]	P [kW]	P [hp]	I [A]	n [1/min]	M [Nm]	NOM. EFF at ... load [%] 4/4	3/4	2/4	Power factor at ... load 4/4	3/4	2/4	I_A/I_N I_l/I_N	M_A/M_N T_l/T_N	M_K/M_N T_B/T_N	IE-CL
230	Δ	50	7.50	- / -	22.50	2950	24.0	90.1	91.0	91.0	0.92	0.90	0.84	8.3	1.9	3.9	IE3
400	Y	50	7.50	- / -	13.10	2950	24.0	90.1	91.0	91.0	0.92	0.90	0.84	8.3	1.9	3.9	IE3
460	Y	60	8.60	- / -	13.00	3550	23.0	90.2	90.8	90.5	0.92	0.90	0.84	8.2	2.0	3.9	IE3
460	Y	60	7.50	- / -	11.50	3560	20.0	90.2	90.4	89.6	0.91	0.88	0.82	9.4	2.2	4.5	IE3
IM B35 / IM 2001			FS 132 S		73 kg	IP55		IEC/EN 60034		IEC, DIN, ISO, VDE, EN							

Mechanical data

Sound pressure level 50Hz/60Hz (load)	68 dB(A) 1)	72 dB(A) 1)
Moment of inertia	0.031 kg m²	
Bearing DE | NDE	6208 2Z C3	6208 2Z C3
Bearing lifetime	40000 h	
Lubricants	Unirex N3	
Regreasing device	No	
Grease nipple	- / -	
Type of bearing	Preloaded bearing DE	
Condensate drainage holes	Yes (standard)	
External earthing terminal		
Vibration severity grade	A	
Insulation	155(F) to 130(B)	
Duty type	S1	
Direction of rotation	bidirectional	
Frame material	cast iron	
Data of anti condensation heating	-/-	
Coating (paint finish)	Standard paint finish C2	
Color, paint shade	RAL7030	
Motor protection	(A) without (Standard)	
Method of cooling	IC411 - self ventilated, surface cooled	

Environmental conditions

Ambient temperature	-20 °C - +40 °C
Altitude above sea level	1000 m

Terminal box

Terminal box position	top
Material of terminal box	cast iron
Type of terminal box	TB1 H01
Contact screw thread	M4
Max. cross-sectional area	6.0 mm²
Cable diameter from ... to ...	11.0 mm - 21.0 mm
Cable entry	2xM32x1,5
Cable gland	2 plugs

Special design (1)

F74 Sheet steel fan cowl

Notes

I_A/I_N = locked rotor current / current nominal
M_K/M_N = break down torque / nominal torque
M_A/M_N = locked rotor torque / torque nominal
1) Value is valid only for DOL operation with motor design IC411

Technical data are subject to change! There may be discrepancies between calculated and rating plate values.

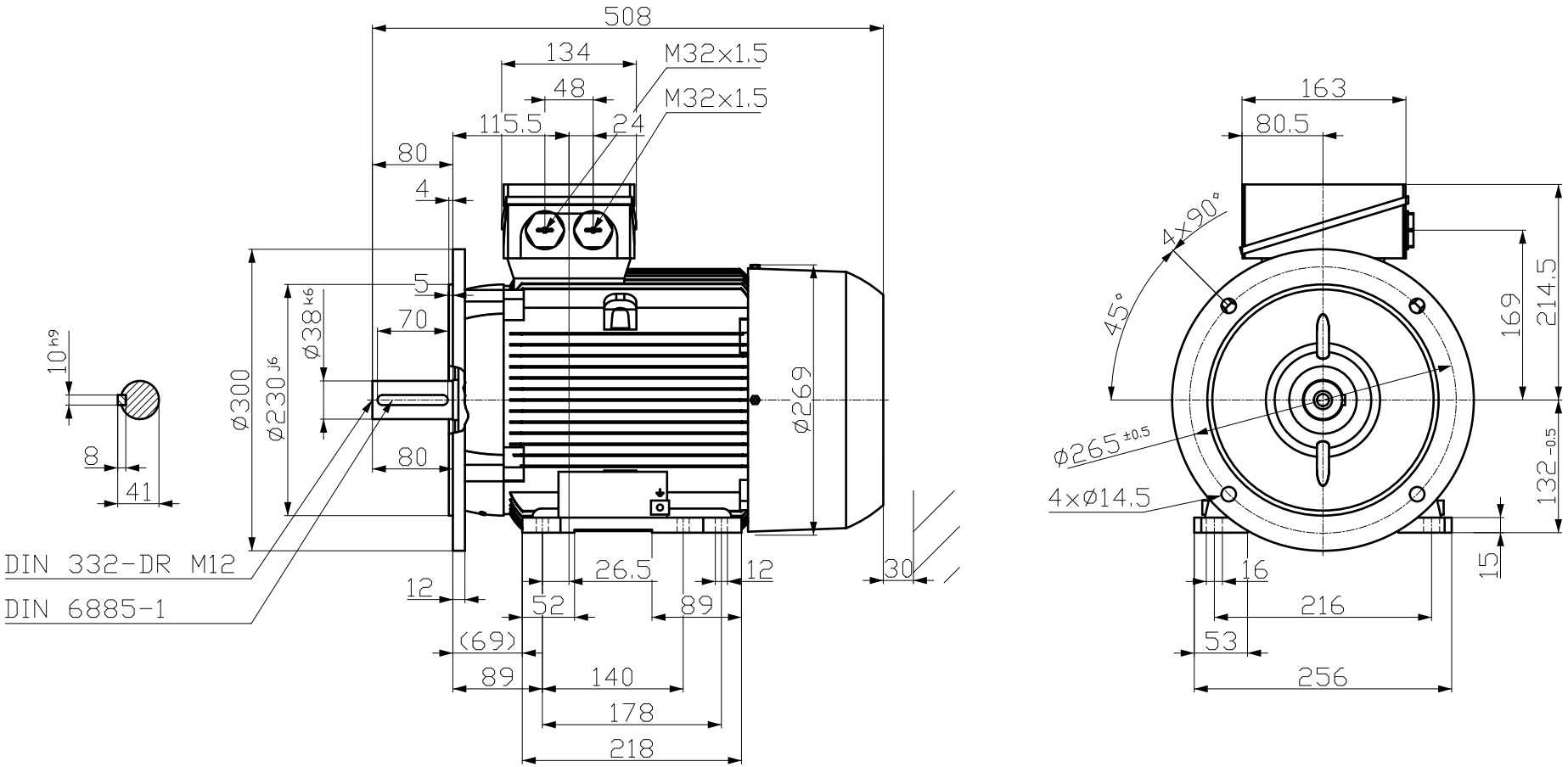

Tolerance	Surface	Material	Weight	Scale
			-	mm

1LE1503-1CA12-2JA4-Z F74	Author	Dimensional drawing MaÇzeichnung	
	Creator DTK		
	Approval		
	Department		
	Change Order	MLFB	Doc Type /
SIEMENS	Doc State 3/21/19	Item No	Paper Size A3
	Revision Index RS	Doc No	1st Language en 2nd Language de
© Siemens AG 2018	Project No -	Ref No -	Sheet 1 of 1

Transmittal, reproduction, dissemination and/or editing of this document as well as utilization of its contents and communication thereof to others without express authorization are prohibited. Offenders will be held liable for payment of damages. All rights created by patent grant or registration of a utility model or design patent are reserved.

Weitergabe sowie Vervielfältigung, Verbreitung und/oder Bearbeitung dieses Dokumentes, Verwertung und Mitteilung seines Inhaltes sind verboten, soweit nicht ausdrücklich gestattet. Zuwiderhandlungen verpflichten zu Schadenersatz. Alle Rechte für den Fall der Patenterteilung, Gebrauchsmuster- oder Geschmacksmustereintragung vorbehalten

Confidential: Tous droits réservés.
Comunicado como secreto empresarial. Reservados todos os direitos.
Confiado como secreto de empresa. Nos reservamos todos los derechos.