Data sheet for three-phase Squirrel-Cage-Motors SIMOTICS

Motor type : 1CV3130A **SIMOTICS SD - 132 S - IM B3 - 2p**

Client order no.	Item-No.	Offer no.
Order no.	Consignment no.	Project
Remarks		

Electrical data

Safe Area

U [V]	Δ / Y	f [Hz]	P [kW]	P [hp]	I [A]	n [1/min]	M [Nm]	η 3) 4/4	η 3) 3/4	η 3) 2/4	cosφ 3) 4/4	cosφ 3) 3/4	cosφ 3) 2/4	I_A/I_N I_l/I_N	M_A/M_N T_l/T_N	M_K/M_N T_B/T_N	IE-CL
DOL duty (S1) - 155(F) to 130(B)																	
400	Δ	50	5.50	-/-	10.10	2945	17.8	89.2	89.5	88.6	0.88	0.84	0.73	8.9	2.5	3.8	IE3
690	Y	50	5.50	-/-	5.90	2945	17.8	89.2	89.5	88.6	0.88	0.84	0.73	8.9	2.5	3.8	IE3
460	Δ	60	6.30	-/-	10.00	3540	17.0	88.5	89.0	88.1	0.89	0.84	0.75	9.9	2.6	4.0	IE2
460	Δ	60	5.50	-/-	8.90	3550	14.8	89.5	89.0	87.0	0.87	0.82	0.71	11.1	3.0	4.6	IE3
IM B3 / IM 1001			FS 132 S			IP55		IEC/EN 60034		IEC, DIN, ISO, VDE, EN							

Environmental conditions : -20 °C - +40 °C / 1000 m

Locked rotor time (hot / cold) : 10.3 s | 14.1 s

Mechanical data

Sound level (SPL / SWL) at 50Hz|60Hz	68 / 80 dB(A) 2)	72 / 84 dB(A) 2)	Vibration severity grade	A
Moment of inertia	0.0168 kg m²		Thermal class	F
Bearing DE | NDE	6308 2Z C3	6308 2Z C3	Duty type	S1
bearing lifetime			Direction of rotation	bidirectional
L_{10mh} $F_{Rad\ min}$ for coupling operation 50|60Hz 1)	40000 h	32000 h	Frame material	cast iron
Lubricants	Unirex N3		Net weight of the motor (IM B3)	66 kg
Regreasing device	No		Coating (paint finish)	Standard paint finish C2
Grease nipple	-/-		Color, paint shade	RAL7030
Type of bearing	Preloaded bearing DE		Motor protection	(A) without (Standard)
Condensate drainage holes	Yes (standard)		Method of cooling	IC411 - self ventilated, surface cooled
External earthing terminal	No			

Terminal box

Terminal box position	top	Max. cross-sectional area	6 mm²
Material of terminal box	cast iron	Cable diameter from ... to ...	11 mm - 21 mm
Type of terminal box	TB1 H01	Cable entry	2xM32x1,5
Contact screw thread	M4	Cable gland	2 plugs

Notes:

I_A/I_N = locked rotor current / current nominal
M_A/M_N = locked rotor torque / torque nominal
M_K/M_N = break down torque / nominal torque

1) L10mh according to DIN ISO 281 10/2010
2) at rated power / at full load
3) Value is valid only for DOL operation with motor design IC411

responsible dep.	technical reference	created by	approved by	*Technical data are subject to change! There may be discrepancies between calculated and rating plate values.*	Link documents
DI MC LVM		DT Configurator			

SIEMENS

document type	document status
datasheet	released
title	document number
1LE1503-1CA03-4AA4-Z F74+L25	

rev.	creation date	language	Page
01	2021-12-13	en	1/2

© Siemens AG 2021

Data sheet for three-phase Squirrel-Cage-Motors SIMOTICS

Motor type : 1CV3130A **SIMOTICS SD - 132 S - IM B3 - 2p**

Special design

F74	Sheet steel fan cowl	L25	Double sides reinforced bearings for DE and NDE, Type 63

Notes:

responsible dep.	technical reference	created by	approved by	*Technical data are subject to change! There may be discrepancies between calculated and rating plate values.*	Link documents
DI MC LVM		DT Configurator			

SIEMENS	document type: datasheet		document status: released		
	title: 1LE1503-1CA03-4AA4-Z		document number		
	F74+L25	rev. 01	creation date 2021-12-13	language en	Page 2/2

© Siemens AG 2021

Transmittal, reproduction, dissemination and/or editing of this document as well as utilization of its contents and communication thereof to others without express authorization are prohibited. Offenders will be held liable for the payment of damages. All rights created by patent grant or registration of a utility model or design patent are reserved.

Weitergabe sowie Vervielfältigung, Verbreitung und/oder Bearbeitung dieses Dokumentes, Verwertung und Mitteilung seines Inhaltes sind verboten, soweit nicht ausdrücklich gestattet. Zuwiderhandlungen verpflichten zu Schadensersatz. Alle Rechte für den Fall der Patenterteilung, Gebrauchsmuster- oder Geschmacksmustereintragung vorbehalten

Confidential tire de secret d'entreprise. Tous droits réservés.
Comunicado como secreto empresarial. Reservados todos os direitos.
[密级/级别/ 1 级机密/秘密] 文件/文档 [未经授权不得传播/复制/使用] 。违反者应赔偿损失。保留所有权利。
Confiado como secreto de empresa. Nos reservamos todos los derechos.

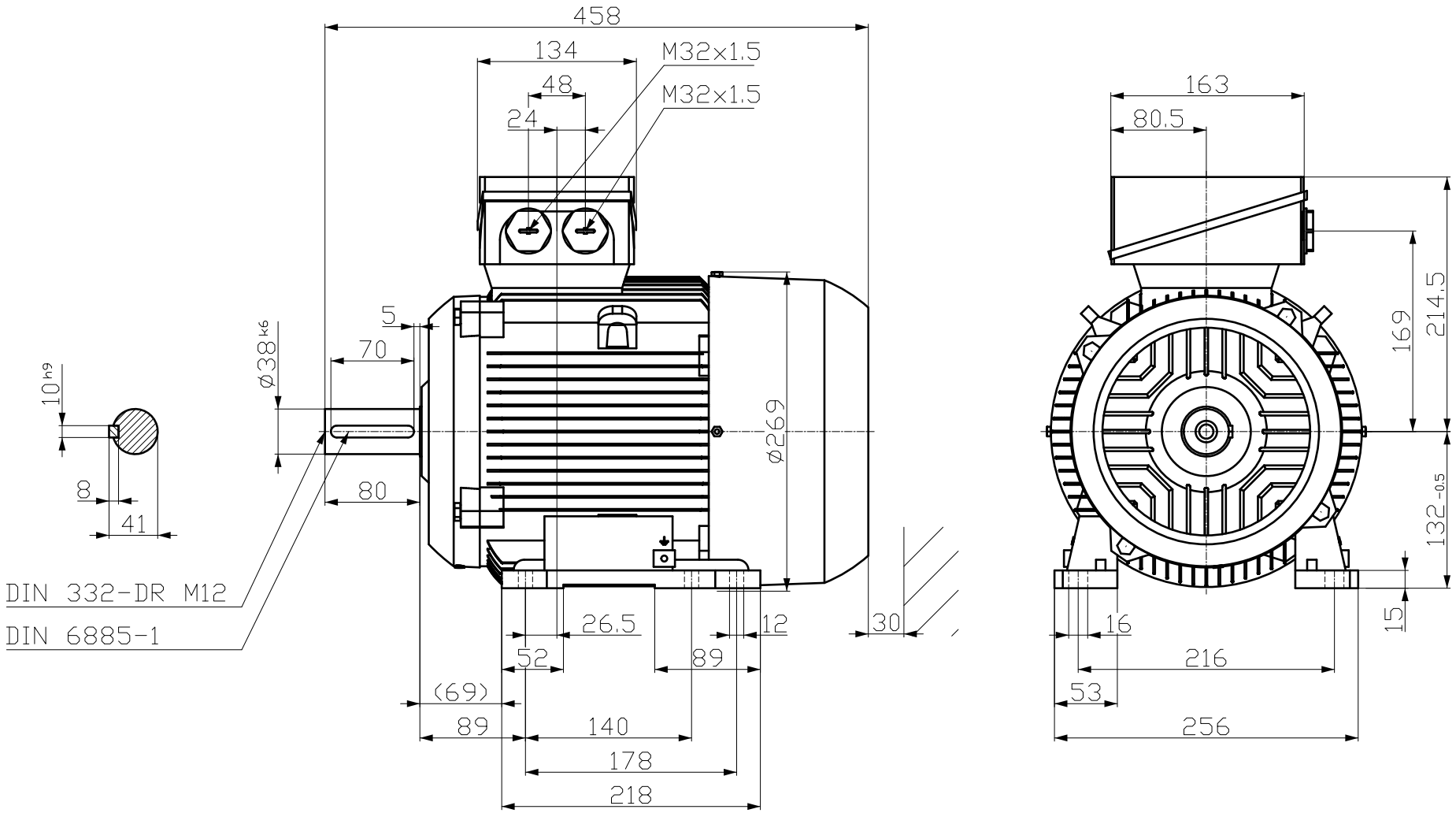

Tolerance	Surface	Material	Weight -	Scale mm
1LE1503-1CA03-4AA4-Z F74+L25	Author Creator DTK Approval Department	Dimensional drawing MaÇzeichnung		
	Change Order	MLFB	Doc Type	
SIEMENS	Doc State 12/13/21 Revision Index RS	Item No Doc No	Paper Size A3 1st Language en 2nd Language de	
© Siemens AG 2018	Project No -	Ref No -	Sheet 1 of 1	